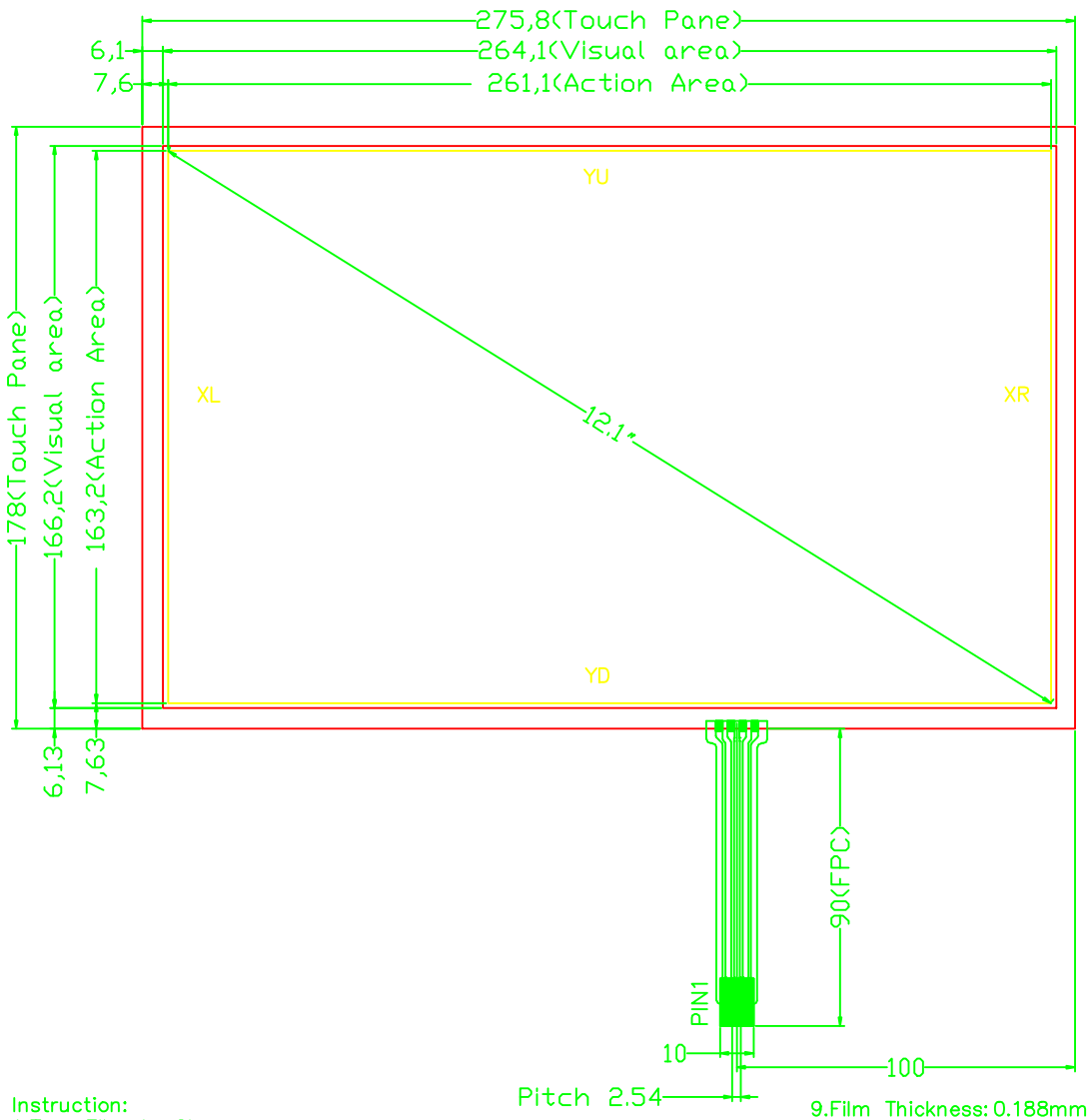


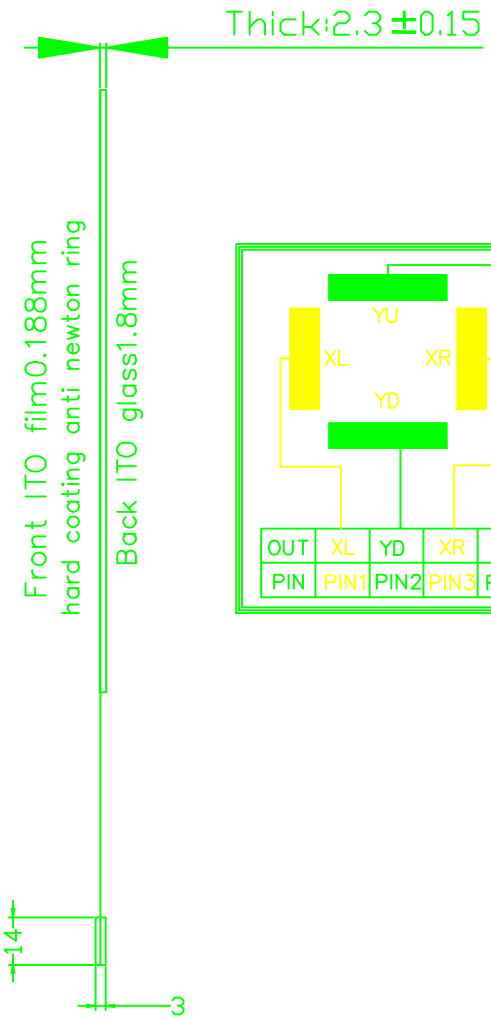


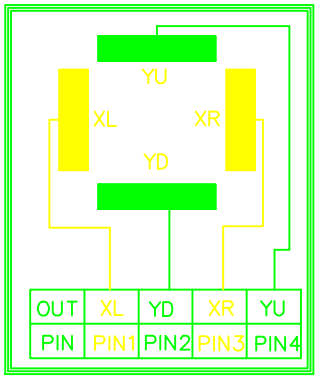


Instruction:
1.Type: Film to Glass
2.Operating Voltage: ≤10V
3.Response Time: ≤10ms
4.Storage Temperature: −20℃~+70℃
5.Operation Temperature/Humidity : −10℃~+60℃/ 20%~95%
6.Hitting Life: >1,000,000 Times ,250gf Force;
7.writting Life>100,000 Times 250gf Force;
8.Connect Material: FPC+PIN

9.Film Thickness: 0.188mm
10.Glass Thickness: 1.8mm
11.Light transmission: ≥78%
12.Force: 100g or more
13.Linearity: ≤1.5%
14.Insulation: ≥20MΩ
15.Resistance: X: 450Ω~980Ω
Y: 190Ω~450Ω
16.Surface Hardness≥3H(pencil)

# Touch−Pane−VTW4121A2

REVISIONS

| | | | | | |
|---|---|---|---|---|---|
| SCALE | 1:1 | MATERIAL | F/G | Version | 1.0 |
| UNIT | mm | TOLERANCE | ±0.3m | NO. | 1 of 1 |
| DESIGN | Lucy | DATE | 20090627 | 深圳市纬拓光技术有限公司 | |
| CHECK | Peter • Li | DATE | 20090627 | Victor-touch Technlogy Co., LTD. | |
| RELEASE | Victor | DATE | 20090627 | 电话:0755-27404000 传真:0755-27404000 www.victor-touch.com | |